BMJ Publishing Group Limited (BMJ) disclaims all liability and responsibility arising from any reliance placed on this supplemental material which has been supplied by the author(s)

SUPPL. FIG. 4

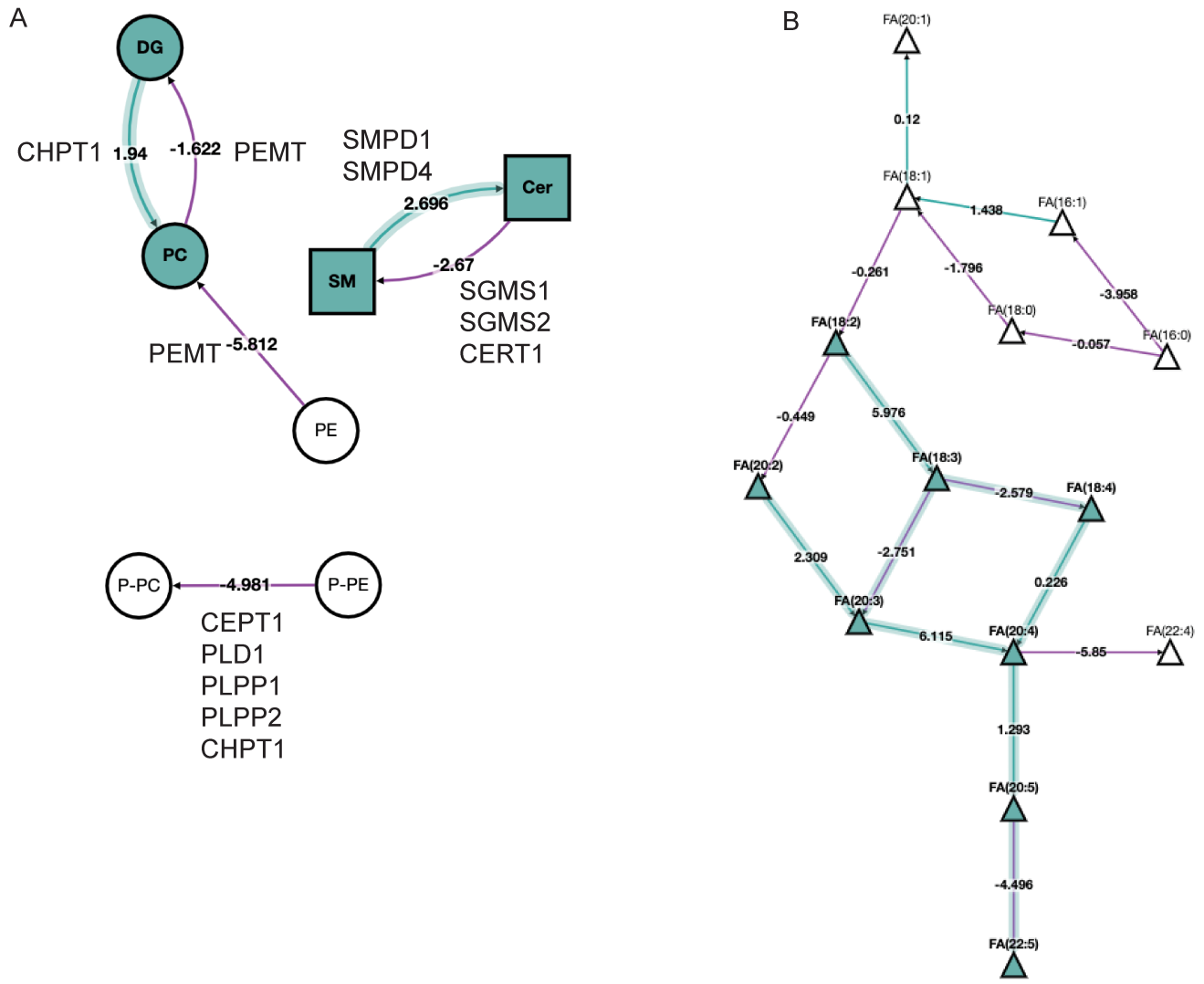
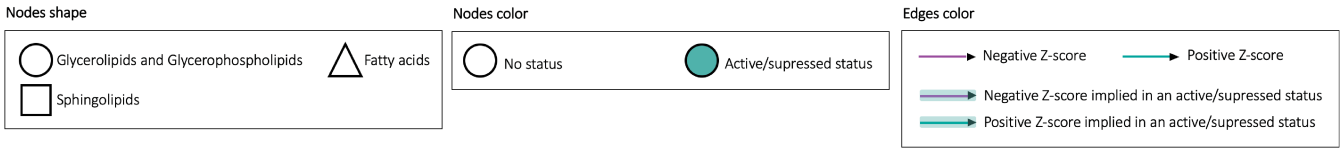
Reactions chains	Z-score	Predicted genes
FA(20:2)→FA(20:3)→FA(20:4)→FA(20:5)→FA(22:5)	2.61	FADS1, FADS1, FADS1, ELOVL5, ELOVL2
FA(18:2)→FA(18:3)→FA(18:4)→FA(20:4)→FA(20:5)	2.458	FADS2, FADS2, ELOVL5, FADS1
FA(18:2)→FA(18:3)→FA(20:3)	2.28	FADS2, ELOVL5, ELOVL7
FA(20:3)→FA(20:4)→FA(20:5)→FA(22:5)	1.681	FADS1, FADS1, ELOVL5, ELOVL2